Proceedings of the Faculty of Technical Sciences, University of Novi Sad

Case Study
UDK: 621.31
DOI: https://doi.org/10.24867/36WS022610

Controlled Energy Storage System for Peak Shaving and Power-Failure Bridging in Servo Drive Systems

Frederic Blank[1], Stephan Beineke[2]
[1,2] *KEBA Industrial Automation Germany GmbH, Lahnau, Germany*
[1]frederic.blank@keba.com, [2]stephan.beineke@keba.com

Abstract – *Dynamic servo drive systems are characterized by fluctuating power demands and increasing requirements for supply reliability. This paper presents a controlled electrical energy storage system and its application in two industrial servo-drive environments. The system combines a bidirectional DC/DC converter, an electrolytic capacitor module, and a control concept based on voltage droop curves and state-of-charge control. It is designed for sub-millisecond response times, high transient power capability, and operation without real-time communication. The first application addresses power-failure bridging in a high-performance injection molding machine. The second application addresses peak-power reduction in an industrial DC grid supplying CNC woodworking machines and robots. Optimized control for the active infeed converter and the energy storage system enables peak-power reduction of more than 30%.*

Keywords: capacitor energy storage, DC grid, DC/DC converter, droop control, injection molding, peak shaving, power failure, servo drive system

1. INTRODUCTION

Modern industrial machines increasingly rely on electrically driven servo systems connected through a common DC link. Such systems offer high efficiency and enable direct reuse of braking energy between drive axes. However, two challenges become increasingly relevant in highly dynamic production systems.

The first challenge is the occurrence of short-duration power peaks. Industrial servo drives, CNC machines and robotics applications can exhibit strongly fluctuating power demands due to acceleration, deceleration and process-related load changes. These peaks increase the required rating of transformers, cables, filters, fuses and power converters, even though the average power demand is significantly lower. The second challenge is the increasing sensitivity of production equipment to interruptions of the power supply. Even short mains failures can result in uncontrolled machine stops, product rejects, additional downtime and potentially mechanical damage. In highly automated production systems, maintaining the operation of critical machine functions during the first milliseconds after a power failure is often essential to avoid production losses [1], [2].

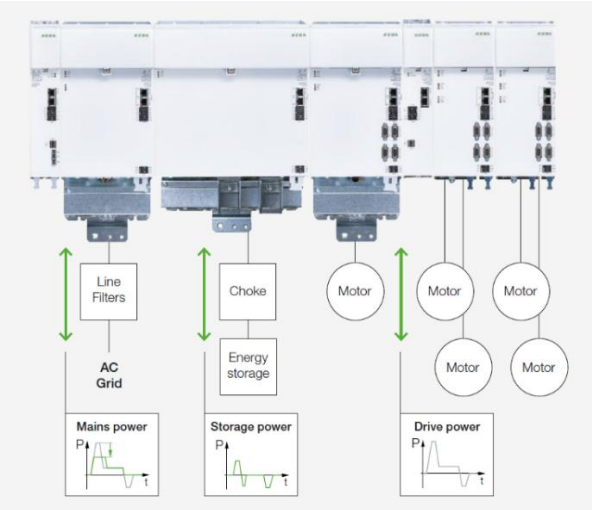

Figure 1. System overview over KEBA KeDrive D3 drive system containing an Active Power Supply Unit (left), an Energy Storage System (middle) and several Servo Drives (right).

Although power-failure support and peak-power reduction appear to be different objectives, both applications require a storage system with similar characteristics. In both cases, the system must react within milliseconds, exchange large amounts of power with the DC link and operate autonomously without dependence on external communication systems.

This paper presents a controlled capacitor-based energy storage system developed for industrial servo drive applications. The system combines a bidirectional DC/DC converter, capacitor storage and decentralized voltage-droop control with state-of-charge management. The same hardware platform is investigated in two different industrial applications. The first application demonstrates power-failure bridging in a high-performance injection molding machine. The second application demonstrates peak-power reduction in an industrial DC grid supplying CNC woodworking machines and handling robots.

The two applications were previously investigated separately for power-failure bridging [3] and peak-power reduction [4]. The present paper combines both use cases and demonstrates their realization using a common storage platform through application-specific parameterization. An exemplary drive system of the KEBA KeDrive D3 containing an Active Power Supply Unit (left), an Energy Storage System (middle) and several Servo Drives (right) is shown in Fig. 1.

The paper is organized as follows. Section 2 introduces the controlled energy storage system, including hardware and control. Sections 3 and 4 present its application to power-failure bridging and peak-power reduction, respectively. Section 5 concludes the paper.

2. CONTROLLED ENERGY STORAGE SYSTEM

2.1 Functional Requirements and Topology

Connecting additional capacitance directly to the DC link without a DC-DC converter is not sufficient for either application. The usable energy is limited because the capacitor can only discharge down to the minimum operating voltage of the connected inverters. Furthermore, direct DC-link capacitance is restricted by system protection and fault-energy considerations. A controlled DC/DC converter decouples the storage voltage from the DC-link voltage and makes a much larger fraction of the stored energy available.

The realized system consists of a bidirectional DC/DC converter, a choke L, the capacitor module, voltage and current measurement, and the embedded control. As shown in Fig. 2, two IGBT half bridges form a full-bridge, two-quadrant converter. Together with the choke, the converter controls positive and negative currents for charging and discharging the energy storage. The storage voltage u_S remains below the DC-link voltage u_{DC}. This non-isolated topology provides bidirectional current control and supports the high currents required by the power-failure application [5].

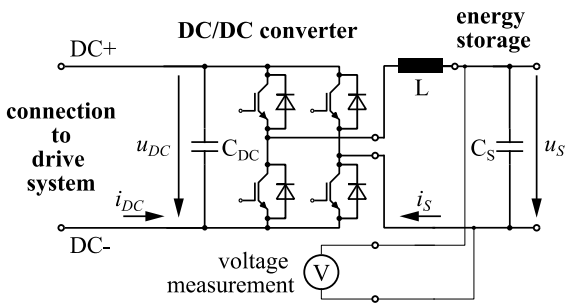

Figure 2. Components of the controlled energy storage system.

2.2 Selection and Dimensioning of the Storage

The storage technology was selected to meet the requirements of a 1 ms response time, currents up to 800 A, and an energy capacity of only a few kilojoules. Among the considered storage technologies, electrolytic capacitors provide a suitable combination of high current capability, fast response, low system complexity, and sufficient energy for the investigated applications [5], [6].

Aluminum electrolytic capacitors optimized for high current and frequent charge-discharge cycles were therefore chosen. The module capacitance is C_S = 110 mF and the maximum storage voltage is $u_{S,max}$ = 390 V, corresponding to more than 8 kJ of stored energy. The available power decreases as the capacitor voltage falls for a current-limited converter, so discharging to zero voltage is neither useful nor required. The dynamically usable energy is more than 5 kJ for a 0.5 s load interval. Additional capacitor modules can be connected in parallel when more energy is required, whereas the converter rating primarily determines the transferable power. Double-layer capacitor modules remain an option for substantially longer support durations and higher energy demands.

2.3 Control Concept

The IGBTs are operated using pulse-width modulation (PWM) with 4 kHz and the choke current is controlled by a fast subordinate loop. The current reference is calculated from a DC-link-voltage droop characteristic and a slower state-of-charge (SOC) controller. The DC-link voltage is available locally at every connected device and acts as an indicator of the instantaneous energy balance. Consequently, the storage can react without a separate power-failure detector, real-time communication or a superimposed grid controller.

The generic characteristic in Fig. 3 defines source and sink operation. If u_{DC} falls below U_{Q1}, the storage acts as a source and injects current. If u_{DC} rises above U_{S1}, it acts as a sink and absorbs energy. Slopes G and current limits set the dynamic response. Stability must be considered together with the minimum connected DC-link capacitance and the response time of all voltage-forming or current-controlled devices [7], [8].

The storage voltage is used to calculate the state of charge and enforce minimum and maximum limits. The slower SOC controller restores a defined operating point between dynamic events. Its output is limited so that the droop response has priority. For power-failure support the SOC is maintained close to the maximum. For peak shaving, the SOC setpoint is set to 95 % in the presented experiment. A lower setpoint can be selected when absorption of regenerative energy is prioritized.

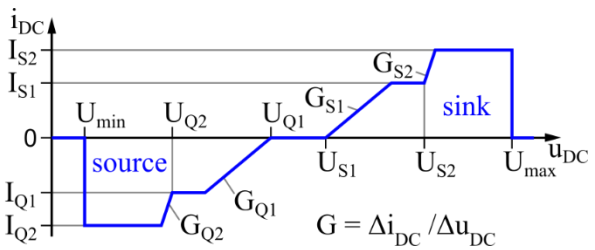

Figure 3. Generic voltage droop characteristic for source and sink operation.

Table 1. Parameters for the power failure application.

Parameter	Value	Parameter	Value
U_{min}	400 V	G_{Q1}	-30 A/V
U_{Q1}	480 V	G_{Q2}	10 A/V
U_{S1}	600 V	I_{Q1}	- 800 A
U_{max}	800 V	I_{S1}	400 A

The parameters are listed in Table 1 for a passive 400 V AC supply. The idle DC-link voltage is approximately 540 V and lies between U_{Q1} and U_{S1}. The asymmetric parameterization produces a rapid high-power response after a voltage decrease while also absorbing regenerative braking energy.

2.4 Dynamic Validation

The converter dynamics were validated in the laboratory before integration into the machines. A step was applied to the storage-current reference and measured with a current probe and oscilloscope. As shown in Fig. 4, the current reaches 800 A in less than 1 ms. This response satisfies both the peak-shaving and the power-failure requirements.

In a second test the storage was discharged at 800 A for 27 ms. The voltage decreased from 390 V to 190 V, withdrawing approximately three quarters of the stored energy. The initial power exceeded 319 kW and decreased to approximately 150 kW as the storage voltage fell. Fig. 5 confirms that the same compact storage can provide very high power for the short transition interval required by the injection molding machine.

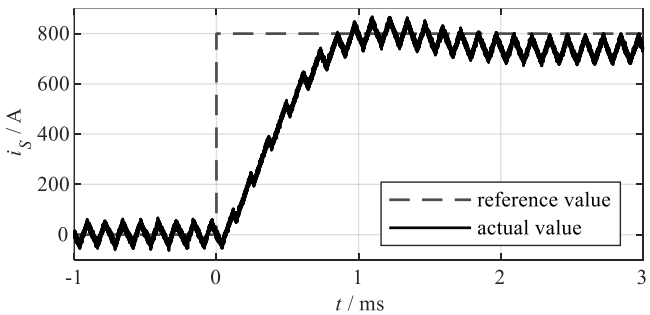

Figure 4. Measured step response of the storage current to an 800 A reference.

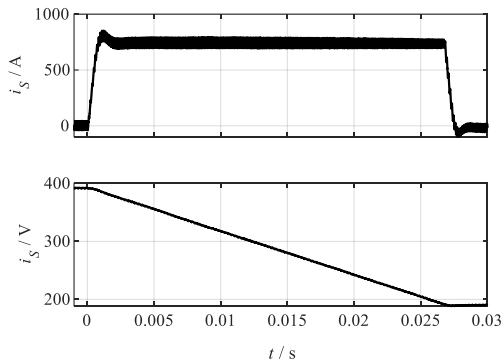

Figure 5. Fast discharge of the energy storage at 800 A for 27 ms.

3. APPLICATION 1: POWER-FAILURE BRIDGING

3.1 Injection Molding Machine and System Extension

The first application is a high-performance injection molding machine for PET preforms. The clamping unit, handling robot, screw drive, hydraulic pump and auxiliary drives are connected to a common DC link supplied from a 400 V or 480 V AC grid. The electrical nominal power of the drive system exceeds 200 kW and the mains peak power can exceed 400 kW. A common DC link already permits direct reuse of regenerative braking energy between the servo axes.

The injection process uses accumulator hydraulics because the injection step requires high power for a short period. A nitrogen accumulator, hydraulic cylinder and proportional valve provide this peak power. During the remaining cycle, a permanent-magnet motor and inverter-driven pump recharge the hydraulic accumulator at lower power. The hydraulic storage contains more than 500 kJ, which is sufficient to complete essential mechanical movements, but the motor-pump system requires approximately 200 ms to change to generator operation after a mains failure. Further details on the power-failure-bridging application and its experimental validation are provided in [3].

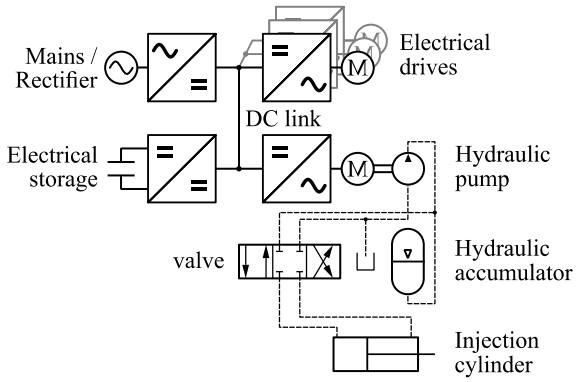

Figure 6. Overview of the injection molding drive system and connected energy sources.

The optional electrical storage is connected directly to the common DC link as illustrated in Fig. 6. With approximately 30 mF of installed DC-link capacitance and a 200 kW load, the inverter undervoltage limit would otherwise be reached within about 10 ms. The electrical storage therefore bridges the initial milliseconds, stabilizes the DC link and coordinates the transition until the hydraulic system can provide sustained energy.

3.2 Mains-Failure Sequence

According to Fig. 7 and Fig. 8, the coordinated sequence is divided into five time ranges. During time range 1, production proceeds normally. The AC mains supplies the drives, the electrical storage is charged, and the hydraulic accumulator remains near nominal pressure. When the mains fails, the DC-link voltage drops and time range 2 begins. The electrical storage detects the voltage decrease locally and supplies high power within one millisecond. The DC-link energy is thereby prevented from falling below the operating limit.

In time range 3, all electrical axes except the hydraulic injection axis perform a quick stop. Their kinetic energy is returned to the common DC link for approximately 100 ms. If this regenerative power raises the DC-link voltage, the electrical storage changes into charging operation and limits the maximum voltage. In time range 4, the motor-pump system transitions to generator operation. During the approximately 200 ms transition, the electrical storage continues to supply the remaining auxiliary demand at lower power. In time range 5, the hydraulic accumulator drives the pump as a generator and supports the DC link for several seconds. The machine can finish cooling, unlock and open the clamping unit, eject the preforms and remove the parts with the handling robot.

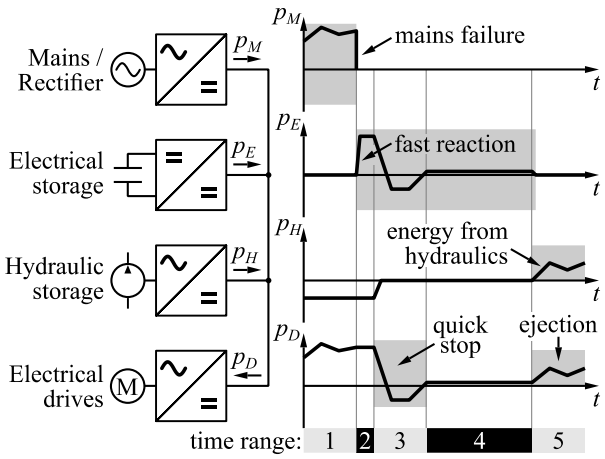

Figure 7. Power flow of the components during the five time ranges of a mains failure.

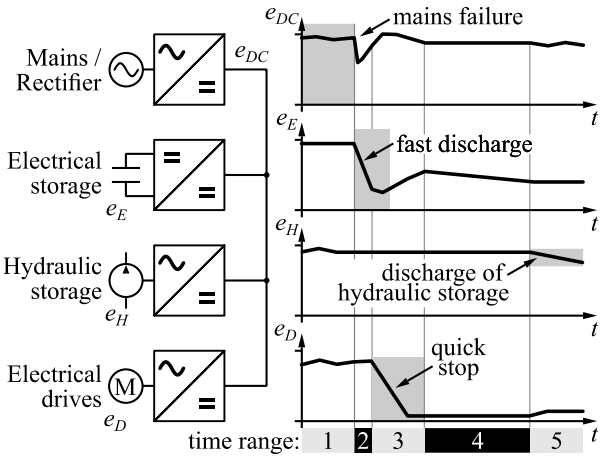

Figure 8. Energy evolution in the DC link, electrical storage, drives and hydraulic accumulator.

3.3 Experimental Results in the Machine

A power failure was initiated during production while the clamping unit was closing at t=0. Fig. 9 shows the first 100 ms. u_{DC} falls to approximately 450 V after the power failure and the electrical storage supplies about 230 kW. The voltage is stabilized after approximately 15 ms. Around 10 ms after the failure, the electrical axes start braking and their required power decreases strongly. The hydraulic pump decelerates and subsequently changes to generator operation.

The complete seven-second sequence is shown in Fig. 10. At approximately 2.05 s, after the preforms have cooled sufficiently, the clamping unit starts unlocking and opening. The pump system supplies the common DC link from the hydraulic accumulator. Ejection and handling then remove the preforms. The test completed the current cycle without rejects, after which the drives remained in standby until the AC supply returned.

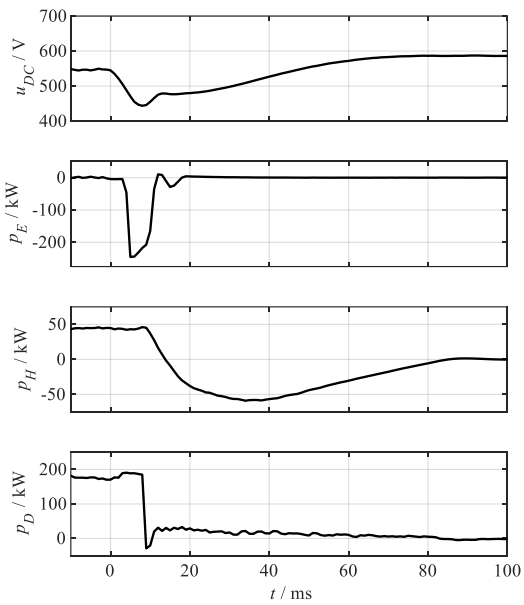

Figure 9. Measured DC-link voltage and component powers during the first 100 ms after failure.

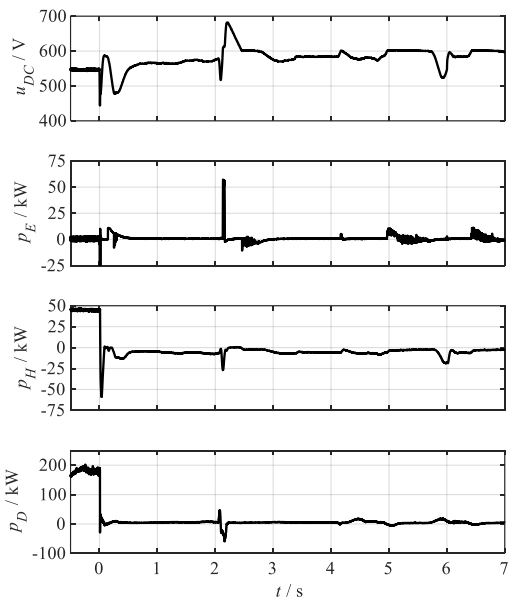

Figure 10. Complete measured power-failure sequence over seven seconds.

4. APPLICATION 2: PEAK-POWER REDUCTION

4.1 Industrial DC Grid and Load Requirement

The second application was investigated within the DC-INDUSTRIE2 research project. Further details on the peak-power-reduction application are provided in [4]. The demonstrator uses a DC grid with approximately 50 mF total capacitance, supplied from the 400 V AC grid by a controlled 30 kW active infeed. It connects three production cells with two woodworking CNC machines and two handling robots; protection devices provide fault isolation according to the industrial DC-grid concept [7], [9], [10].

Fig. 11 shows the complete demonstrator. Storage and active infeed share the DC bus and operate without direct communication. During the representative 75 s machining cycle in Fig. 12, the mean AC power is 16 kW and short peaks reach 37 kW. Although the common DC bus reuses braking energy and smooths individual drives, substantial residual peaks remain. Further measured advantages of the demonstrator are reported in [11].

These peaks can oversize transformers, lines, filters and fuses relative to the mean power. Approximately 5 kJ of usable storage energy is sufficient for a significant reduction. The storage must react within 1 ms and recover between events, which are more than 0.5 s apart, without creating a new power peak.

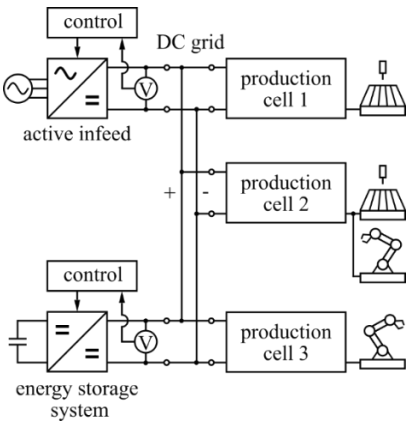

Figure 11. DC grid with active infeed, three production cells and energy storage system.

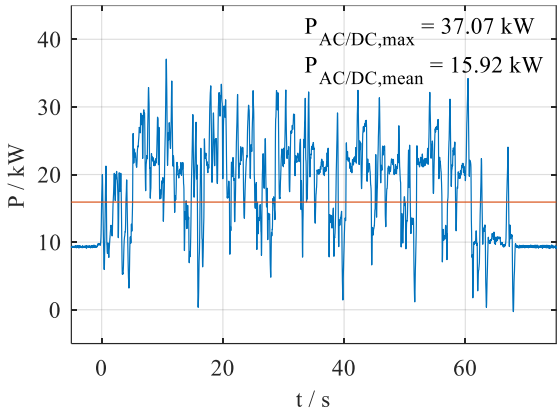

Figure 12. Measured AC power of the industrial DC grid during a representative cycle.

4.2 Application-Specific Droop Curve

Peak-power reduction is achieved by coordinating the droop characteristics of the active infeed and energy storage like shown in Fig. 3. The infeed supplies the normal load up to its current limit; a further decrease in DC-link voltage moves the storage into its source range, where it supplies the additional demand. The maximum stable slope depends on the device dynamics and the minimum connected DC-link capacitance. The droop characteristics are coordinated such that the first 26 kW are supplied by the active infeed converter, whereas additional power is provided by the energy storage system.. During regeneration the energy is first used to recharge the storage. If the storage reaches its upper SOC limit, excess energy is fed back into the AC grid. If the storage becomes depleted, additional power is supplied by the active infeed converter to maintain operation [7], [8].

4.3 Experimental Peak-Shaving Results

The storage was activated during the same representative cycle used for the baseline measurement. The upper trace in Fig. 13 shows that the active-infeed power is limited to 26 kW and the energy storage supplies the difference during the dynamic peaks. The middle trace shows that u_{DC} remains within the operating ranges defined by the breakpoints and slopes of the droop characteristics in Fig. 3. During high load, the active infeed first increases its current and the storage subsequently enters its source range once the infeed limit is reached. During low-load or regenerative intervals, the operating point returns toward the zero-current range, or the storage briefly enters its sink range. The lower trace shows the SOC. It reaches a minimum of approximately 25 %, thus leaving control reserve for changes in the load profile, and it returns toward the 95 % idle setpoint after each event.

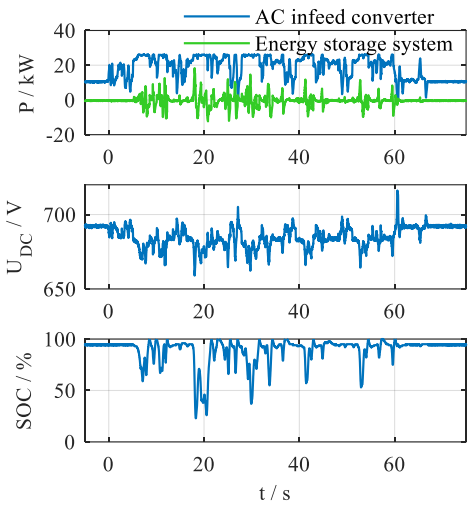

Figure 13. Measured operating principle of active infeed and energy storage under droop control.

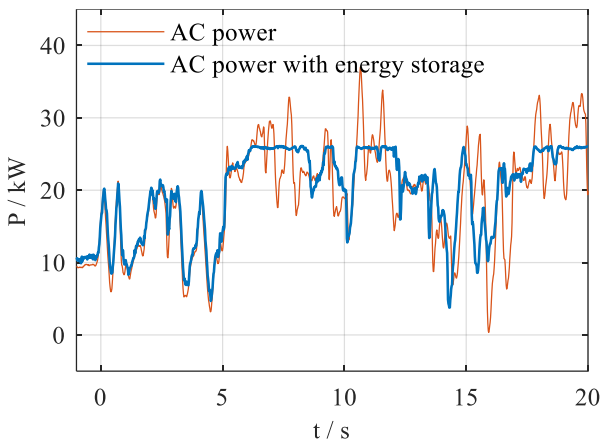

Figure 14. Measured AC infeed power without and with storage during peak-power reduction.

A direct comparison of the first 20 s is presented in Fig. 14. Without storage, the AC power reaches approximately 38 kW. With the storage active, the maximum is reduced to 26 kW, corresponding to a reduction of more than 30 %. After each clipped peak, the infeed power is temporarily slightly higher because the SOC controller recharges the storage. This controlled recovery prevents continuous discharge and prepares the system for the next peak without communication between the participating devices.

5. CONCLUSION

A controlled capacitor-based energy storage system has been presented and experimentally validated in two industrial servo-drive applications. The common platform combines a bidirectional IGBT DC/DC converter, a 110 mF, 390 V capacitor module, fast current control, voltage droop characteristics, and SOC control without real-time communication. It reaches 800 A in less than 1 ms and provides more than 300 kW in laboratory discharge tests.

Although power-failure bridging and peak-power reduction address different industrial objectives, both applications are realized using the same storage hardware and control architecture. In the power-failure application, the storage acts as a fast transient power source that stabilizes the DC link immediately after a mains interruption. In the peak-shaving application, the storage acts as an energy-management device that reduces the required grid connection power by supplying dynamic load peaks. The results demonstrate that different energy-management functions can be implemented through application-specific parameterization while retaining the same converter topology, storage technology, and control structure.

In an injection molding machine, approximately 6 kJ of stored energy bridges the initial interval after a power failure until the hydraulic accumulator and motor-pump system support the DC link, allowing the production cycle to be completed without rejects. In an industrial DC grid, approximately 5 kJ is exchanged repeatedly between the storage and the DC bus. Coordinated droop characteristics of the active infeed and storage system reduce the AC-grid peak power from approximately 38 kW to 26 kW, corresponding to a reduction of more than 30 %, while SOC control restores readiness between successive load peaks.

The presented results show that a common capacitor-based storage platform can provide both resilience against power interruptions and peak-power reduction in industrial servo-drive systems. The modular concept separates power and energy scaling, enabling adaptation to a wide range of applications through converter sizing, storage capacity, and control parameterization. The presented results demonstrate that a common capacitor-based storage platform can provide both resilience against power interruptions and peak-power reduction in industrial servo-drive systems, enabling the reuse of a single hardware and control architecture across different industrial applications.

REFERENCES

[1] BIHK, "Energiewende im Strommarkt – Versorgungsqualität," IHK in Bayern, Munich, Germany, 2017.

[2] A. Sauer, Ed., Die Gleichstromfabrik. Munich, Germany: Carl Hanser Verlag, 2020.

[3] F. Blank, M. Hausammann, and S. Beineke, "Fast reacting 300 kW energy storage for power failure bridging in injection molding machines," in *Proc. 26th European Conf. Power Electronics and Applications (EPE'24 ECCE Europe)*, 2024.

[4] F. Blank and S. Riethmüller, "Peak power reduction of drive systems in an industrial DC grid," ETG-Fachbericht 172, Electromechanical Drive Systems Conference, Vienna, Austria, Nov. 2023, pp. 195–199.

[5] K. Tytelmaier, O. Husev, O. Veligorskyi, and R. Yershov, "A review of non-isolated bidirectional DC-DC converters for energy storage systems," in *Proc. YSF*, Kharkiv, Ukraine, 2016, pp. 22–28.

[6] A. Rufer, D. Hotellier, and P. Barrade, "A supercapacitor-based energy storage substation for voltage compensation in weak transportation networks," *IEEE Trans. Power Del.*, vol. 19, no. 2, Apr. 2004.

[7] ZVEI, Open DC Alliance, and DC-INDUSTRIE2 Consortium, "System concept DC-INDUSTRIE2," Feb. 2, 2024.

[8] L. Ott, M. Schulz, B. Wunder, and M. Maerz, "Investigation of stability issues in droop-controlled DC micro-grids with intermediate bus architecture," in *Proc. PCIM Europe*, Nuremberg, Germany, 2019.

[9] H. Borcherding, J. Austermann, T. Kuhlmann, B. Weis, and A. Leonide, "Concepts for a DC network in industrial production," in *Proc. IEEE 2nd Int. Conf. DC Microgrids*, Nuremberg, Germany, 2017, pp. 227–234.

[10] K. Askan, M. Bartonek, and K. Weichselbaum, "Power module for low-voltage DC hybrid circuit breaker," in *Proc. IEEE 3rd Int. Conf. DC Microgrids*, Matsue, Japan, 2019.

[11] S. Warkentin, S. Puls, S. Riethmüller, F. Blank, and H. Borcherding, "Measured advantages of a production plant with DC grid in terms of energy efficiency, peak power reduction and power quality," in *Proc. PCIM Europe*, Nuremberg, Germany, 2023, pp. 1–7.

AUTHOR BIOGRAPHIES

Frederic Blank received the Dipl.-Ing. degree in Electrical Engineering from the University of Stuttgart, Germany, in 2009 and the Ph.D. degree in 2019. His research focused on electric drive systems, energy efficiency, motors, and motion control. Since 2017, he has been working in the R&D department of LTI Motion / KEBA Industrial Automation, focusing on power electronics for servo drives, active front-end converters, and energy storage systems. He contributed to the DC-INDUSTRIE and DC-INDUSTRIE2 projects, supporting the specification and development of industrial DC grids leading to the Open DC-Alliance.

KEBA Industrial Automation Germany GmbH, Lahnau, Germany
E-mail: frederic.blank@keba.com

Stephan Beineke received the Dipl.-Ing. degree in Electrical Engineering in 1994 and the Ph.D. degree in 1999, both from the University of Paderborn, Germany. Since then, he has been working in the R&D department of LTI Motion / KEBA Industrial Automation as a R&D manager, focusing on the control of servo drives, power electronics, mechatronics and drive system solutions.

KEBA Industrial Automation Germany GmbH, Lahnau, Germany
E-mail: stephan.beineke@keba.com